FINISHES UPGRADE

FOR

ISLANDS TRUST

LOCATED AT:

200-1627 FORT STREET

VICTORIA BC

COPYRIGHT RESERVED

This specification and the works herein have been prepared by GRAPHIC OFFICE INTERIORS. The drawings, specifications and details forming the design of this project are and shall at all times remain the exclusive property of GRAPHIC OFFICE INTERIORS and cannot be used or reproduced without written consent.

LIST OF DRAWINGS

TITLE PAGE	LIST OF DRAWINGS
ID-1	DEMOLITION & CONSTRUCTION PLAN
ID-2	REFLECTED CEILING PLAN
ID-3	FURNITURE & ELECTRICAL PLAN
ID-4	FINISHES PLAN
ID-5	DETAILS
ID-6	DETAILS

GENERAL SCOPE

COSMETIC UPGRADE TO INCLUDE: SOME DEMO, NEW PARTITIONS, MODIFICATIONS TO HVAC & ELECT, MILLWORK, NEW FLOORING AND PAINT.
GC TO INCLUDE FOR ALL REQUIRED DESIGN/BUILD ENGINEERING, PERMITS AND TO APPLY FOR THE BP PERMIT

DATED: 10 MAY 2018

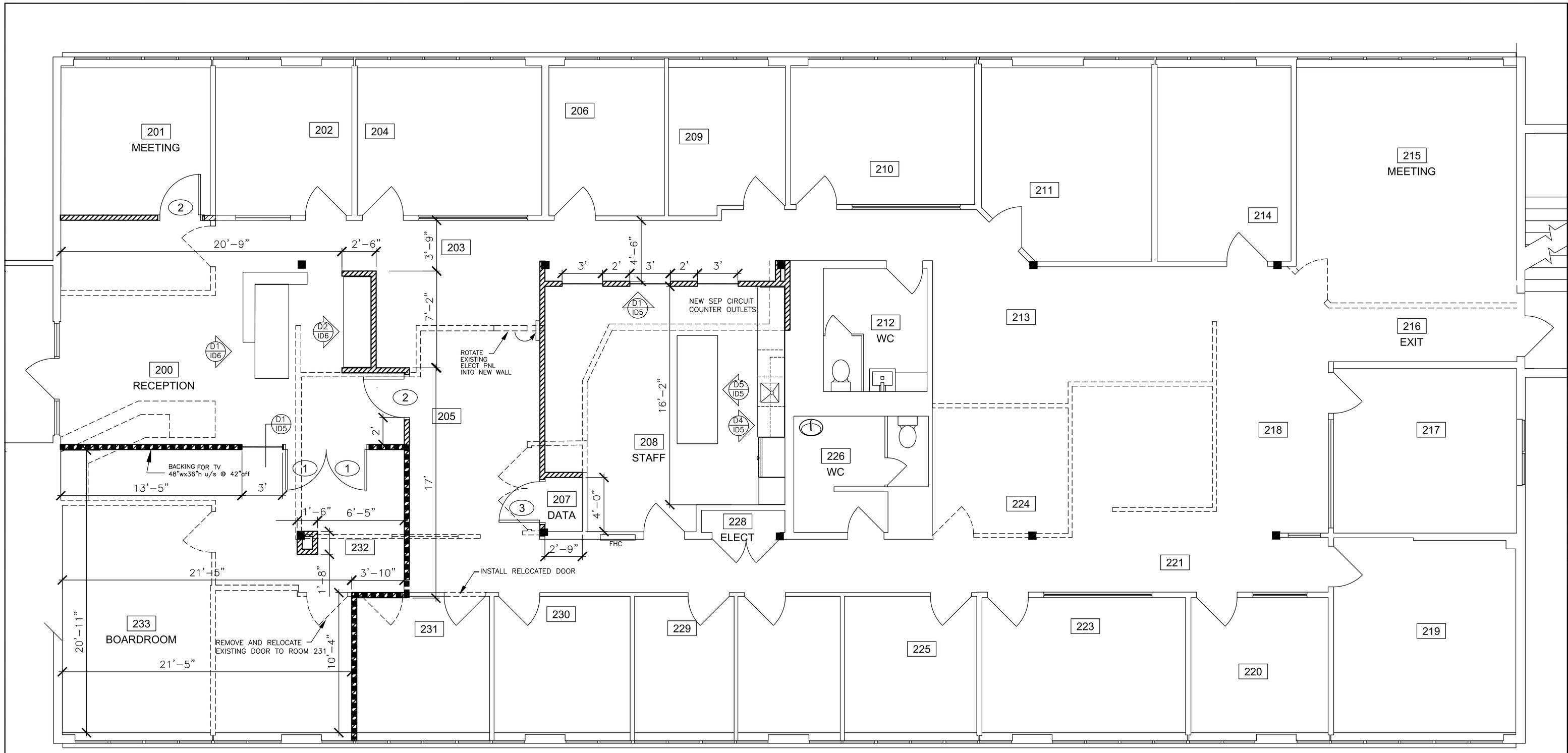

WALL LEGEND

T-BAR CEILING HEIGHT 7'-11"

EXISTING WALL TO REMAIN

EXISTING WALL TO BE DEMOLISHED
REPAIR ADJACENT WALLS & CEILING

NEW PARTITION TO U/S T-BAR
92mm ST ST. @406 O.C.
16mm GWB
INSULATE WITH R-12 FIBERGLASS BATT TO FILL CAVITY.

FULL HEIGHT PARTITION TO U/S STRUCTURE
92mm ST ST. @406 O.C.
16mm GWB
INSULATE WITH R-8 FIBERGLASS BATT TO FILL CAVITY.
PROVIDE CONTINUOUS ACOUSTIC SEALANT AT TOP AND BOTTOM STUD TRACKS

GENERAL SCOPE

COSMETIC UPGRADE TO INCLUDE: SOME DEMO, NEW PARTITIONS, HVAC, ELECT, MILLWORK NEW FLOORING AND PAINT.
GC TO INCLUDE FOR ALL REQUIRED DESIGN/BUILD ENGINEERING, PERMITS AND TO APPLY FOR THE BP PERMIT

MODIFY LIGHTING TO SUIT NEW LAYOUT – REPLACE (19) RECESSED FLUORESCENT WITH NEW LED TROFFERS TME
MODIFY HVAC TO SUIT NEW LAYOUT
MODIFY ELECT/DATA
MODIFY SPRINKLERS TO SUIT NEW LAYOUT

REMOVE EXISTING FLOORING AND PREPARE FOR NEW THOUGHOUT

REMOVE EXISTING VENETIAN BLINDS – INSTALL ROLLER BLINDS – SEE FINISHES PLAN

PREPARE FOR NEW CARPET TILE AND LVT IN STAFF ROOM & WASHROOMS

PREPARE ALL WALLS FOR NEW PAINT, INCLUDING EXISTING WALLCOVERING
EXISTING WALLCOVERING TO BE PATCHED AND PREPED FOR PAINT

NEW MILLWORK IN STAFF ROOM, REPLACE EXISTING SINK/FAUCET

GC TO INCLUDE FOR ALL MOVING OF EXISTING FURNITURE, BOX MOVES, DUST MANAGEMENT AND DURING CONSTRUCTION.
ALL WORK TO BE DONE DURING BUSINESS HOURS, PHASING TO BE DETERMINED BY CONTRACTOR.

STAFF ROOM 208

SINK: BLANCO QUATRUS R15 U1 MEDIUM APRON 401869
FAUCET: BLANCO PANERA FAUCET 402043

APPLIANCES S&I BY CONTRACTOR:
DISHWASHER: WHIRLPOOL WDT970SAHZ
FRIDGE: FISHER & PAYKEL 36"WIDE ACTIVESMART COUNTER DEPTH FRENCH DOOR
RF201ADX5 STAINLESS STEEL

DOOR SCHEDULE:

TYPE 1: DOUBLE DOORS, 3'-0" x 7'-0" x 1 3/4" THICK SOLID CORE
GLASS PANEL INSERT 6" IN FROM SIDES, 12" IN FROM BOTTOM
2" MDF PAINTED DOOR FRAMES
VERTICAL PULLS: GSH 166 DOUBLE BACK TO BACK
FINISH: 630 SATIN STAINLESS STEEL, LENGTH: 36" LONG
DOOR STOP

TYPE 2: SINGLE DOOR, 3'-0" x 7'-0" x 1 3/4" THICK SOLID CORE
GLASS PANEL INSERT 6" IN FROM SIDES, 12" IN FROM BOTTOM
2" MDF PAINTED DOOR FRAMES
VERTICAL PULLS: GSH 166 BACK TO BACK
FINISH: 630 SATIN STAINLESS STEEL, LENGTH: 36" LONG
DOOR STOP, CLOSERS
SEE ELEVATION 3 ON ID5

TYPE 2: SINGLE DOOR, 3'-0" x 7'-0" x 1 3/4" THICK SOLID CORE
2" MDF PAINTED DOOR FRAMES
DOOR STOP, STOREROOM FUNCTION LOCKSET
12"X12" LOUVRE GRILLE IN BOTTOM OF DOORS – PAINTED PT-2

GENERAL NOTES:

ALL ANGLES ARE 90 DEGREES OR 45 DEGREES UNLESS OTHERWISE NOTED.

ALL DIMENSIONS ARE NOMINAL ONLY. CONTRACTOR TO PROVIDE A CHALK LINE LAYOUT TO ENSURE ALL DIMENSIONS CAN BE MET, PRIOR TO CONSTRUCTION OF PREMISES.

CONTRACTOR RESPONSIBLE FOR ALL SITE MEASUREMENTS AND IS TO REPORT ANY DISCREPANCIES TO DESIGNER IMMEDIATELY IN WRITING. SITE TO BE CLEANED DURING CONSTRUCTION AND REFUSE TO BE REMOVED BY CONTRACTOR.

THE ELECTRICAL CONTRACTOR IS RESPONSIBLE TO VERIFY SITE FOR EXISTING BELLS, PULL STATIONS, EMERGENCY LIGHTS AND EXIT LIGHTS AND TO ENSURE THAT QUOTATIONS ENCOMPASS ANY ADDITIONAL REQUIREMENTS.

CONTRACTOR TO PROVIDE ALL ENGINEERING PLANS.

PROVIDE SHOP DRAWINGS AND SAMPLES FOR ALL MILLWORK

CONTRACTOR SHALL VERIFY ALL DIMENSIONS AND CONDITIONS SHOWN ON DRAWINGS AT THE JOB SITE AND SHALL NOTIFY DESIGNER OF ANY DISCREPANCIES, OMISSIONS, AND/OR CONFLICTS BEFORE PROCEEDING WITH THE JOB.

CONTRACTOR MUST COMPLY WITH RULES AND REGULATIONS OF AGENCIES HAVING JURISDICTION AND SHALL CONFORM TO ALL CITY, MUNICIPAL AND FEDERAL CONSTRUCTION, SAFETY AND SANITARY LAWS, CODES, STATUTES AND ORDINANCES. ALL FEES, TAXES, PERMITS, APPLICATIONS AND CERTIFICATES OF INSPECTION AND THE FILING OF ALL WORK WITH GOVERNMENTAL AGENCIES SHALL BE THE RESP. OF THE CONTRACTOR.

CONTRACTOR SHALL COMPLY WITH THE RULES AND REGULATIONS OF THE BUILDING AS TO HOURS OF AVAILABILITY OF LOADING DOCKS AND ELEVATORS FOR THE PURPOSES OF DELIVERY AND TO THE MANNER OF HANDLING MATERIALS, EQUIPMENT AND DEBRIS TO AVOID CONFLICT AND INTERFERENCE WITH NORMAL BUILDING OPERATIONS.

ANY MISSING INFORMATION OR DETAILS DOES NOT ABSOLVE THE CONTRACTOR COMPLETING THE WORK.

NOTE:

DO NOT SCALE DRAWINGS

CONTRACTOR AND ALL SUB-CONTRACTORS SHALL VERIFY ALL JOB SITE DIMENSIONS, ALL DRAWINGS, DETAILS AND SPECIFICATIONS AND REPORT ANY DISCREPANCIES TO THE INTERIOR DESIGNERS PRIOR TO PROCEEDING WITH THE WORK.

THIS DRAWING AND ALL ELECTRONIC MEDIA IS THE EXCLUSIVE PROPERTY OF GRAPHIC OFFICE INTERIORS LTD. AND CAN BE REPRODUCED ONLY WITH THE PERMISSION OF GRAPHIC OFFICE INTERIORS LTD. IN WHICH CASE THE REPRODUCTION MUST BEAR THEIR NAME AS INTERIOR DESIGNERS.

NO.	BY	DATE	DESCRIPTION
1	LH		ISSUED FOR REVIEW

REVISIONS

NOMINAL NORTH

CONSULTANTS

GRAPHiC
OFFICE INTERIORS
1751 SEAN HEIGHTS, SAANICHTON BC
T.250-544-3509 F.250.544-6663

PROJECT

ISLANDS TRUST
200–1627 FORT STREET
VICTORIA BC

SHEET TITLE

DEMO & CONSTRUCTION PLAN

SCALE	DRAWN BY	CHECKED	SHEET NO.
1/4"=1'-0"	LH		1D1 OF 6
DATE 10 MAY 2018	ACAD FILE NAME		
DATE ISSUED 10 MAY 2018	PROJECT NO.		REVISION NO. 1

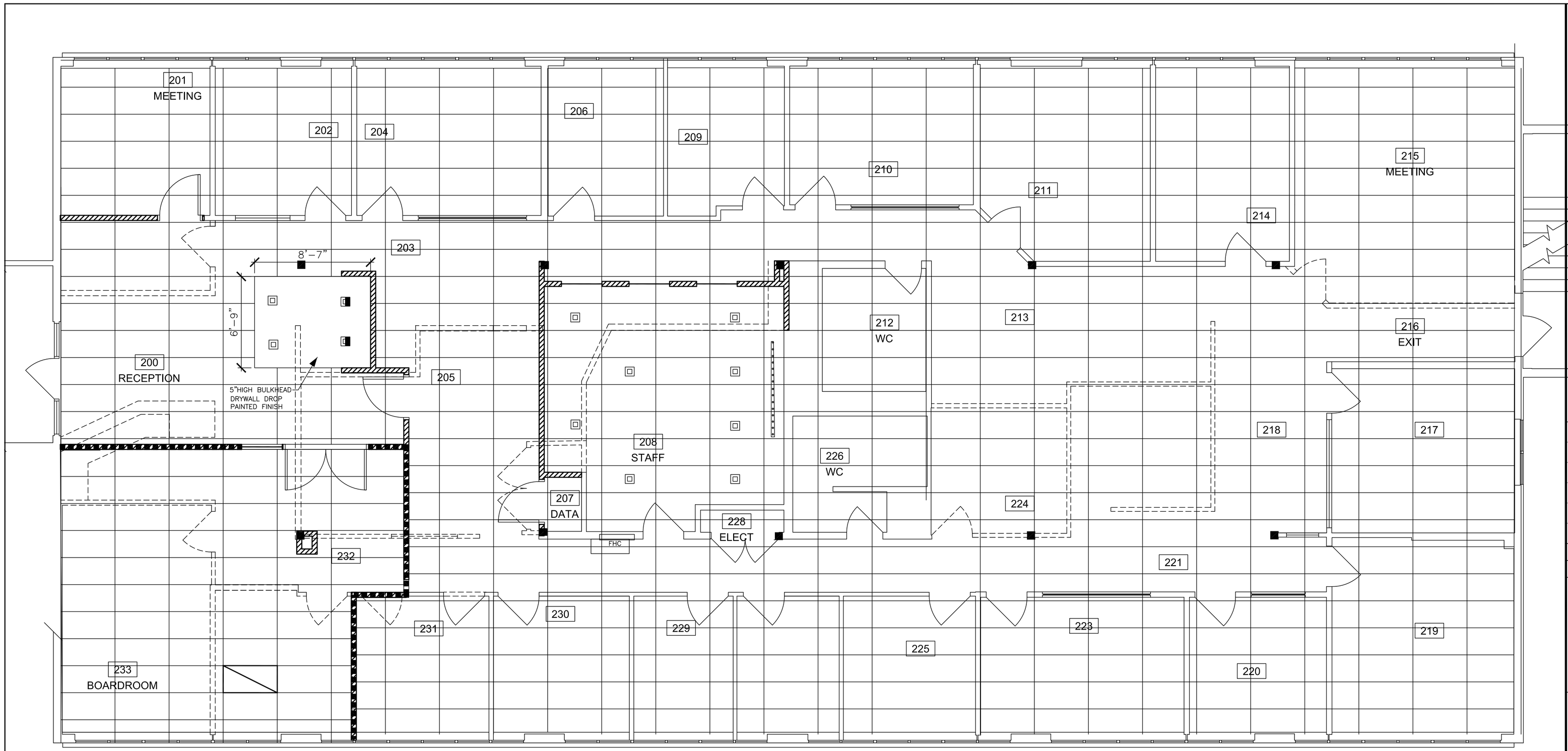

WALL LEGEND

T–BAR CEILING HEIGHT 7'–11"

EXISTING WALL TO REMAIN

EXISTING WALL TO BE DEMOLISHED
REPAIR ADJACENT WALLS & CEILING

NEW PARTITION TO U/S T–BAR
92mm ST ST. @406 O.C.
16mm GWB
INSULATE WITH R–12 FIBERGLASS BATT TO FILL CAVITY.

FULL HEIGHT PARTITION TO U/S STRUCTURE
92mm ST ST. @406 O.C.
16mm GWB
INSULATE WITH R–8 FIBERGLASS BATT TO FILL CAVITY.
PROVIDE CONTINUOUS ACOUSTIC SEALANT AT TOP AND BOTTOM STUD TRACKS

REFLECTED CEILING PLAN LEGEND

T–BAR HEIGHT 7'–11" AFF
REPLACE DAMAGED OR MISSING CEILING TILES TO MATCH EXISTING

MODIFY LIGHTS TO SUIT NEW LAYOUT
REMOVE (19) 2'X4' OLD FLUORESCENT FIXTURES AND INSTALL (19) NEW VOLUMETRIC TROFFERS TO MATCH EXISTING
PATCH AND REPAIR CEILING WHERE WALLS REMOVED

SQUARE POT LIGHT
WAC LIGHTING TESLA
TRIM: HR–LED411/bk/bn
HOUSING: HR–LED–418n35
ON DIMMER BOARDROOM 1104 – SEP SWITCH

SQUARE WALL WASHER POT LIGHT
WAC LIGHTING TESLA

LED STRIP LIGHTING
UNDER CABINET IN 208 STAFF

NOTES:

STAFF ROOM 208 TO HAVE NEW LIGHTING – REMOVE EXISTING RECESSED 2X4
PRICE TO INCLUDE AIR BALANCING – HOT AND COLD SPOTS THROUGHOUT SPACE TO BE CORRECTED.

GENERAL NOTES:

1. PROVIDE APPROPRIATE CLEARANCES FOR FIXTURES, DUCTS, CEILING AND RELATED ITEMS NECESSARY TO MAINTAIN THE SPECIFIED FINISHED HEIGHT ABOVE THE FINISHED FLOOR SLAB. NOTIFY DESIGNER OF ANY CONFLICTS WITH EXISTING OR NEW MECHANICAL COMPONENTS AND SPECIFIED CEILING HEIGHTS.

2. VERIFY FIELD CONDITIONS AND LOCATIONS OF ALL PLUMBING, SPRINKLER LINES AND HEADS, MECHANICAL FANS, DUCTS, CONDUITS AND OTHER RELATED ITEMS SO AS NOT TO CONFLICT WITH LUMINARIES AND ANY AND ALL FIELD CONDITIONS. CONTRACTOR IS RESPONSIBLE FOR THE COORDINATION OF PLENUM ELEMENTS.

3. MATCH AND INSTALL SWITCHES AND OUTLETS AT APPROPRIATE HEIGHT TO MEET ALL LOCAL BUILDING CODE REQUIRMENTS, UNLESS OTHERWISE NOTED. VERIFY SLAB CONDITIONS. HEIGHTS ARE DETERMINED FORM TOP OF FLOOR SLAB TO CENTRE LINE COVER PLATE MOUNTED VERTICALLY LENGTHWISE, UNLESS OTHERWISE NOTED. NEW GANG–SWITCHED COVER PLATES SHALL BE ONE PIECE TYPE, GROUPED IN EQUAL GANGS OF 3 OR 4 SWITCHES STACKED VERTICALLY.

4. VERIFY THE LOCATION OF THERMOSTATS WITH THE DESIGNER. UNLESS OTHERWISE NOTED LOCATE IN DRYWALL, NO EXPOSED CONDUIT.

5. INSTALL UNDERWRITERS LABRATORIES INC. (UL) LABLED DEVICES.

6. INSTALL LUMINAIRES AND OTHER FIXTURES ON CENTRE OF TILE WHERE APPLICABLE UNLESS OTHERWISE NOTED.

7. COORDINATE OWNER'S TELEPHONE AND SECURITY SYSTEMS AS REQUIRED.

9. PROVIDE AS–BUILT DRAWINGS OF HVAC LAYOUT UPON COMPLETION.

10. D.I. LIGHT FIXTURES TO HAVE NO. 12 GAGE HANGER WIRE CONNECTED FROM THE FIXTURE HOUSING TO THE STRUCTURE ABOVE. ONE WIRE FOR FIXTURES LESS THAN 10LBS. TWO WIRES FOR FIXTURES UP TO 56LBS ANY PENDANT FIXTURES TO BE SUPPORTED DIRECTLY FROM THE STRUCTURE ABOVE USING NO. 9 GAGE WIRE.

11. PLAN TO BE REVIEWED BY QUALIFIED PROFESSIONAL AND ADJUSTED TO MEET APPLICABLE CODE RESTRICTIONS. COORDINATE FINAL LAYOUT WITH DESIGNER.

NOTE:

DO NOT SCALE DRAWINGS

CONTRACTOR AND ALL SUB-CONTRACTORS SHALL VERIFY ALL JOB SITE DIMENSIONS, ALL DRAWINGS, DETAILS AND SPECIFICATIONS AND REPORT ANY DISCREPANCIES TO THE INTERIOR DESIGNERS PRIOR TO PROCEEDING WITH THE WORK.

THIS DRAWING AND ALL ELECTRONIC MEDIA IS THE EXCLUSIVE PROPERTY OF GRAPHIC OFFICE INTERIORS LTD. AND CAN BE REPRODUCED ONLY WITH THE PERMISSION OF GRAPHIC OFFICE INTERIORS LTD. IN WHICH CASE THE REPRODUCTION MUST BEAR THEIR NAME AS INTERIOR DESIGNERS.

NO.	BY	DATE	DESCRIPTION
1	LH		ISSUED FOR REVIEW

REVISIONS

NOMINAL NORTH

CONSULTANTS

GRAPHiC
OFFICE INTERIORS
1751 SEAN HEIGHTS, SAANICHTON BC
T.250-544-3509 F.250.544-6663

PROJECT

ISLANDS TRUST
200–1627 FORT STREET
VICTORIA BC

SHEET TITLE

REFLECTED CEILING PLAN

SCALE	DRAWN BY	CHECKED	SHEET NO.
1/4"=1'–0"	LH		ID2 OF 6
DATE: 10 MAY 2018	ACAD FILE NAME		
DATE ISSUED: 10 MAY 2018	PROJECT NO.		REVISION NO. 1

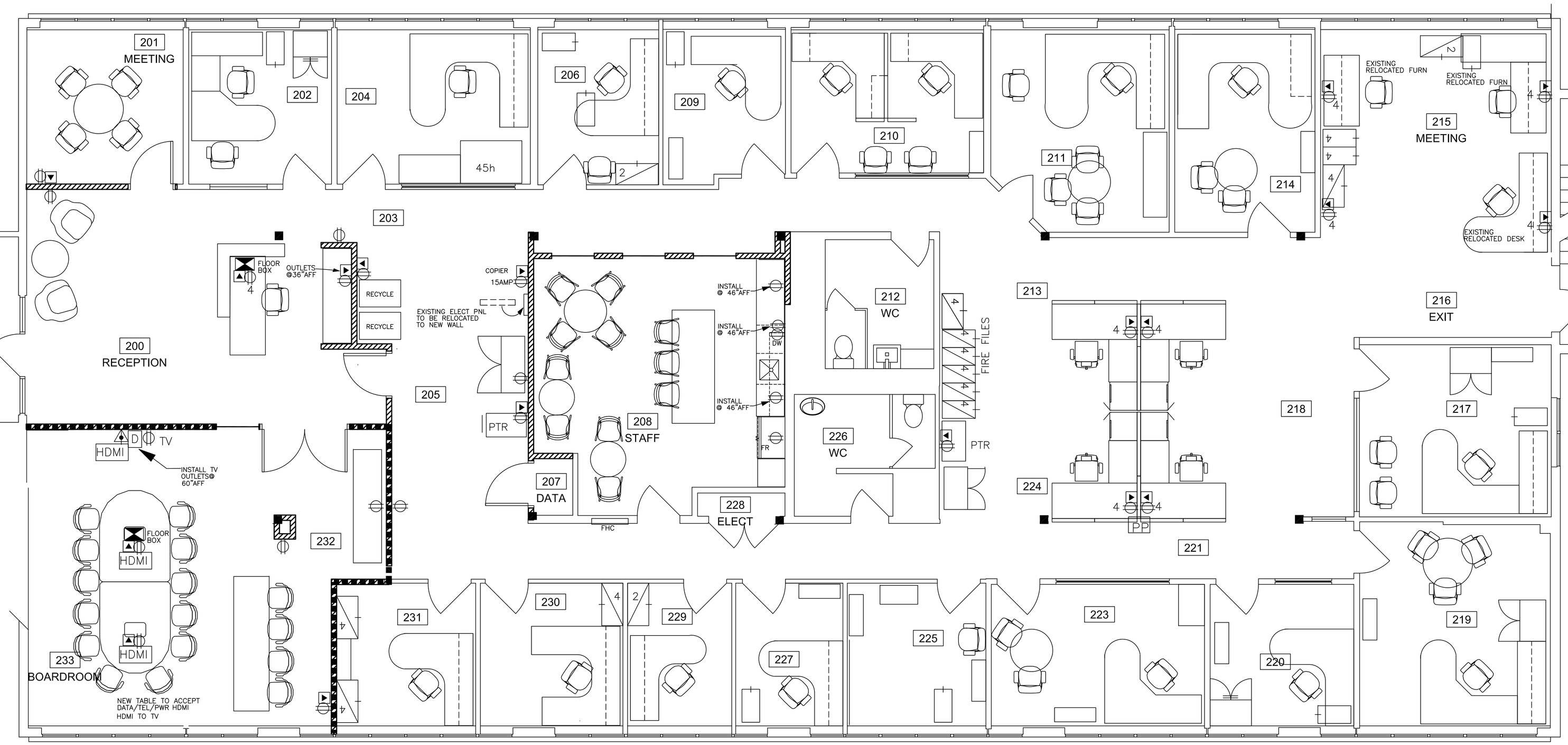

ELECTRICAL AND COMMUNICATION LEGEND

- WALL OR FURNITURE MOUNTED DUPLET OUTLET
- WALL OR FURNITURE MOUNTED 4PLEX OUTLET
- WALL MOUNTED OR SYSTEM FURNITURE MOUNTED 2 DATA OUTLETS
  ALL DATA OUTLETS TO RUN BACK TO MAIN SERVER 207
- D — WALL MOUNTED OR SYSTEM FURNITURE MOUNTED 1 DATA OUTLET
  ALL DATA OUTLETS TO RUN BACK TO MAIN DATA CLOSET 207
- HDMI — HDMI OUTLET
- COAX
- SURFACE MOUNTED FLOOR BOX WITH 2 DATA AND A 4PLEX OUTLET
  DESK TO ACCEPT DATA/PWR/TEL.
  AV SPECS BY ISLANDS TRUST

NOTES

- ALL WORKSTATIONS TO HAVE 2 DATA OUTLETS AND 4 RECEPTACLE OUTLETS (1 4PLEX)
- NEW DATA CABLES TO ROUTE BACK TO DATA ROOM 207 THROUGH DISTRIBUTION BOXES IN CEILING.
- ALL NEW SWITCH COVERS AND FACEPLATES TO MATCH EXISTING
- PRINTER LOCATIONS TO BE CONFIRMED BY ISLANDS TRUST
- THESE DRAWINGS TO BE USED IN CONJUNCTION WITH ENGINEERING DRAWINGS (PROVIDED BY GC)
- EXACT MEDIA EQUIPMENT & LOCATIONS DETERMINED BY ISLANDS TRUST
- EXISTING WIRELESS NETWORK THROUGHOUT TO REMAIN
- NEW FURNITURE BY OTHERS
- ALL EXISTING FURNITURE MOVES BY GC

DATA CLOSET 207

- ISLANDS TRUST TO MODIFY EQUIPMENT LOCATIONS PRIOR TO WALL DEMO – GC TO COORDINATE
- MAINTAIN (2) 15 AMP 110 RECEPTACLES & (2) 30 AMP 220 RECEPTACLES

ELECTRICAL POWER POLE LEGEND

PP — NEW FURNITURE SYSTEM SUPPLIED POLE 8 WIRE CAPACITY
ELECTRICIAN TO SUPPLY JUNCTION BOX & CONNECT IN CEILING

- LINE 1
- LINE 2
- LINE 3
- N
- G

- LINE 4
- N
- G

NOTE:

DO NOT SCALE DRAWINGS

CONTRACTOR AND ALL SUB-CONTRACTORS SHALL VERIFY ALL JOB SITE DIMENSIONS, ALL DRAWINGS, DETAILS AND SPECIFICATIONS AND REPORT ANY DISCREPANCIES TO THE INTERIOR DESIGNERS PRIOR TO PROCEEDING WITH THE WORK.

THIS DRAWING AND ALL ELECTRONIC MEDIA IS THE EXCLUSIVE PROPERTY OF GRAPHIC OFFICE INTERIORS LTD. AND CAN BE REPRODUCED ONLY WITH THE PERMISSION OF GRAPHIC OFFICE INTERIORS LTD. IN WHICH CASE THE REPRODUCTION MUST BEAR THEIR NAME AS INTERIOR DESIGNERS.

NO.	BY	DATE	DESCRIPTION
1	LH		ISSUED FOR REVIEW

REVISIONS

NOMINAL NORTH

CONSULTANTS

GRAPHiC
OFFICE INTERIORS
1751 SEAN HEIGHTS, SAANICHTON BC
T.250-544-3509 F.250.544-6663

PROJECT

ISLANDS TRUST
200–1627 FORT STREET
VICTORIA BC

SHEET TITLE

FURNITURE & ELECTRICAL PLAN

SCALE	DRAWN BY	CHECKED	SHEET NO.
1/4"=1'-0"	LH		ID3 OF 6
DATE: 10 MAY 2018	ACAD FILE NAME		
DATE ISSUED: 10 MAY 2018	PROJECT NO.		REVISION NO. 1

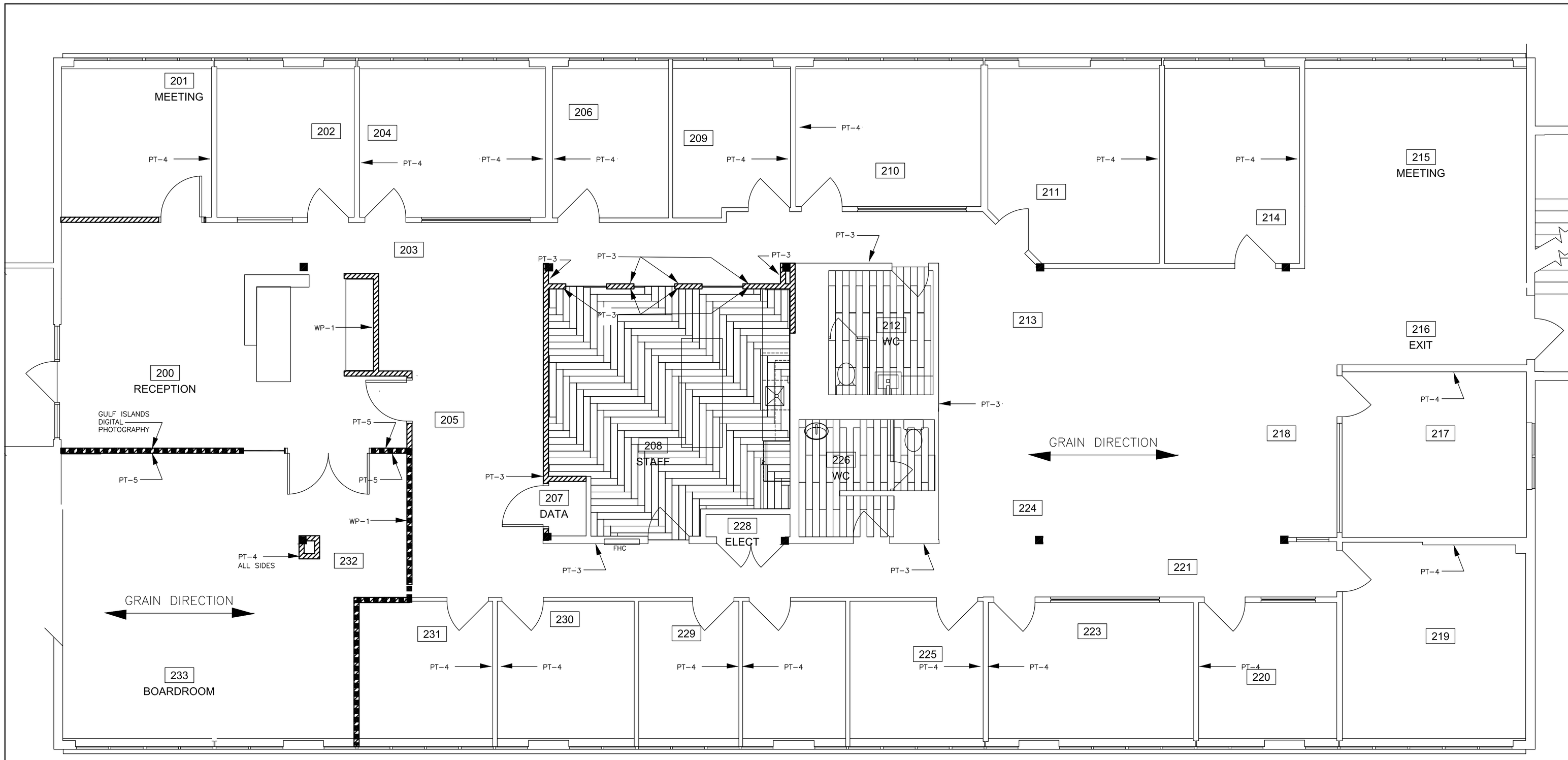

NOTE:

DO NOT SCALE DRAWINGS

CONTRACTOR AND ALL SUB-CONTRACTORS SHALL VERIFY ALL JOB SITE DIMENSIONS, ALL DRAWINGS, DETAILS AND SPECIFICATIONS AND REPORT ANY DISCREPANCIES TO THE INTERIOR DESIGNERS PRIOR TO PROCEEDING WITH THE WORK.

THIS DRAWING AND ALL ELECTRONIC MEDIA IS THE EXCLUSIVE PROPERTY OF GRAPHIC OFFICE INTERIORS LTD. AND CAN BE REPRODUCED ONLY WITH THE PERMISSION OF GRAPHIC OFFICE INTERIORS LTD. IN WHICH CASE THE REPRODUCTION MUST BEAR THEIR NAME AS INTERIOR DESIGNERS.

FLOORING FINISHES:

CARPET 1: C-1 — PATCRAFT CARPET TILE
GRADIENT FORM
10467 SLOPE
COLOUR: 00550 CLIMB
ASHLAR INSTALL
INCLUDE 2% ATTIC STOCK

VINYL PLANK 1: VP-1 — SHAW HARDSURFACE
SOLITUDE LVT
NATURAL 48250
HERRINGBONE INSTALL CAFE

RUBBER COVE BASE: (RCB-1) — JOHNSONITE 4" BASE
COLOUR: 08 ICICLE

WALL FINISHES:

PAINT 1: (PT-1) — GENERAL WALL COLOUR
BENJAMIN MOORE
2143-70 SIMPLEY WHITE
ALL WALLS UNLESS OTHERWISE INDICATED & CEILING BULKHEAD

PAINT 2: (PT-2) — PAINTED DOORS AND FRAMES, SILLS
BENJAMIN MOORE
2143-70 SIMPLEY WHITE

PAINT 3: (PT-3) — ACCENT WALLS
BENJAMIN MOORE
2144-10 GUACAMOLE

PAINT 4: (PT-4) — ACCENT WALLS
BENJAMIN MOORE
2133-40 DIOR GRAY

PAINT 5: (PT-5) — ACCENT WALLS
PRATT & LAMBERT
19-17 BLACKWATCH GREEN

DIGITAL PHOTOGRAPHY — ALLOW FOR $1700.00
TBD

WALL TILE: (WT-1) — OLYMPIA TILE
COLOUR AND DIMENSION
MATTE 4"X16"
ARCTIC WHITE
STACKED VERTICAL INSTALL
FOR SPLASH STAFF ROOM 208

WALL PANELLING: (WP-1) — FINIUM WALL PANELLING
ONATA
CHENE BLANC ANTIQUE
(HARDWOOD INSTALLER)
WALL BEHIND RECEPTION AND AREA 232

FINISH NOTES

PAINTING, STAINING AND WALLCOVERING TO BE DONE IN ACCORDANCE WITH STANDARDS AND REQUIREMENTS OF THE CANADIAN PAINTING CONTRACTORS ASSOCIATION SPECIFICATION MANUAL AND THE M.P.D.A. OF B.C.. TWO YEAR QUARANTEE.

ALL WALLS TO BE PAINTED UNLESS OTHERWISE NOTED: 1 COAT LATEX SEALER, 2 COATS LATEX, EGGSHELL TEXTURE. COLOURS AS SPECIFIED.

SOLID CORE DOORS AND ANY OTHER WOOD OR MDF MATERIAL CALLED UP TO BE PAINTED: 1 COAT SEALER, 2 COATS SEMI-GLOSS ALKYD.

ALL DRYWALL TO BE TREATED AND SEALED ACCORDINGLY FOR WALL FINISHES.

ALL INTERIOR FINISHES TO CONFORM TO SUBSECTION 3.1.13 OF B.C.B.C.

CONTRACTOR TO ENSURE ALL FINISHING TO BE OF THE HIGHEST STANDARD. ALL DEFECTIVE WORKMANSHIP WILL BE REJECTED CAUSING REMEDIAL WORK TO BE DONE.

NO.	BY	DATE	DESCRIPTION
1	LH		ISSUED FOR REVIEW

REVISIONS

NOMINAL NORTH

CONSULTANTS

GRAPHiC
OFFICE INTERIORS
1751 SEAN HEIGHTS, SAANICHTON BC
T.250-544-3509 F.250.544-6663

PROJECT

ISLANDS TRUST
200-1627 FORT STREET
VICTORIA BC

SHEET TITLE

FINISHES PLAN

SCALE	DRAWN BY	CHECKED	SHEET NO.
1/4"=1'-0"	LH		ID4 OF 6
DATE: 10 MAY 2018	ACAD FILE NAME		
DATE ISSUED: 10 MAY 2018	PROJECT NO.		REVISION NO. 1

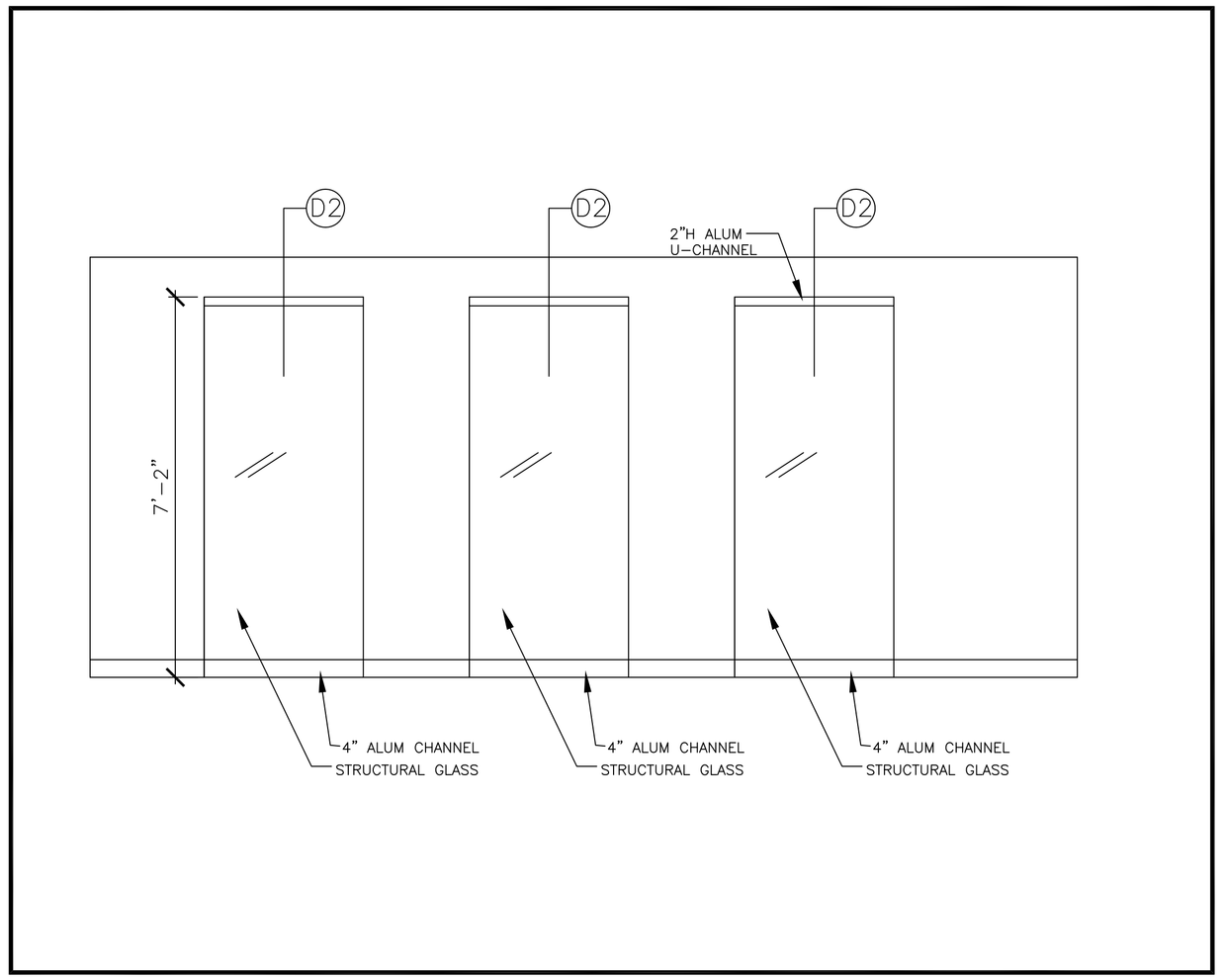

D1 ELEVATION STAFF ROOM 208 GLAZING
SCALE: 3"=1'-0"

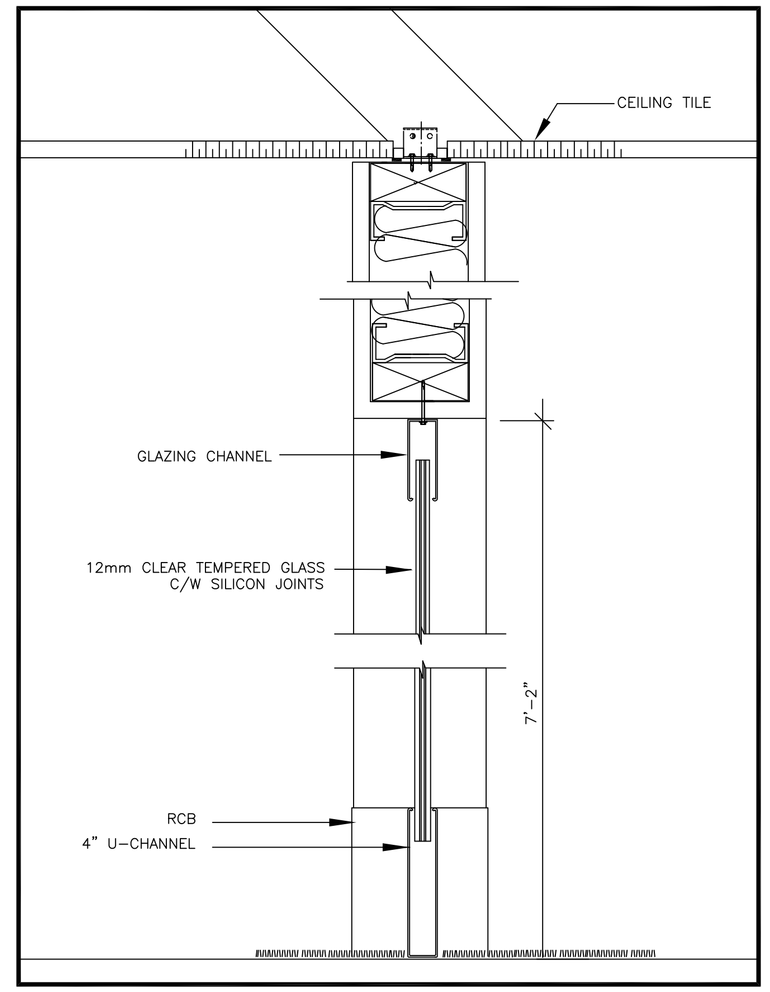

D2 SECTION WALL STAFF ROOM 208 GLAZING
SCALE: 3"=1'-0"

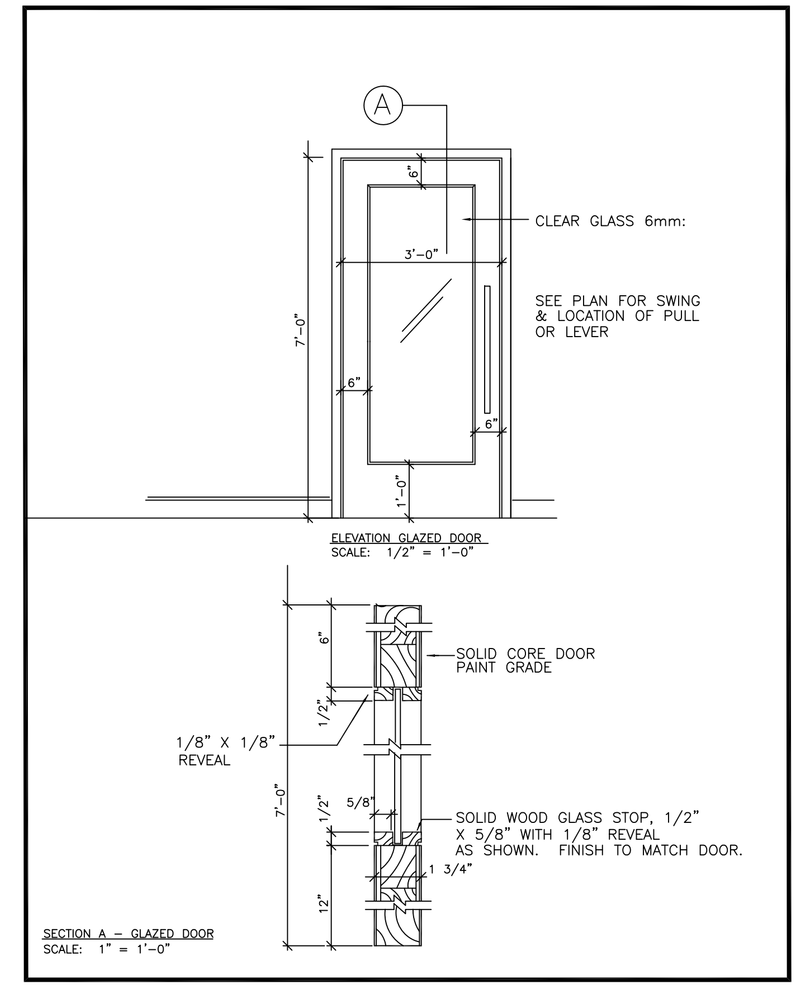

D3 DOOR TYPE 2
SCALE: 3"=1'-0"

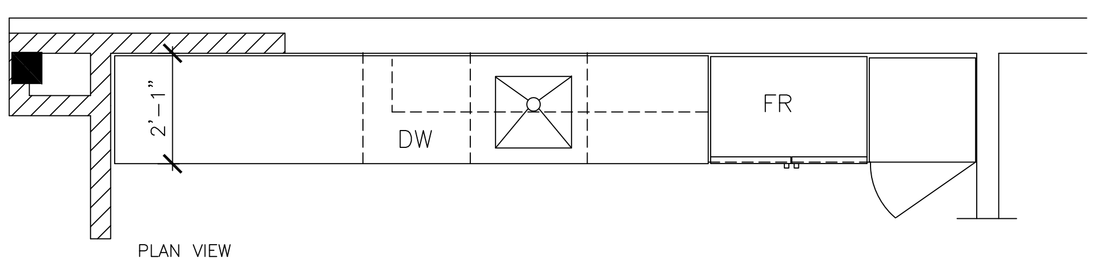

SINK: BLANCO QUATRUS R15 U1 MEDIUM APRON 401869
FAUCET: BLANCO PANERA FAUCET 402043
INTERIOR BOXES AND ADJUSTABLE SHELVES
3/4" PREFINISHED BIRCH PLYWOOD

PLAM-1
UPPER DOORS & PANTRY DOORS:
ZENIT BLANCO

PLAM-2
LOWER DOORS & DRAWERS: RICHELIEU
RICHELIEU ZENIT ANTRACITA

COUNTER TOP CAMBRIA QUARTZ BRITANNICA
CONTACT FLO FORM FOR PRICING

PULLS: RICHELIEU BP3487143170
BLUMOTION ON DOORS AND DRAWERS

SHOP DRAWINGS REQUIRED FOR ALL MILLWORK
ALL DIMENSIONS TO BE SITE VERIFIED

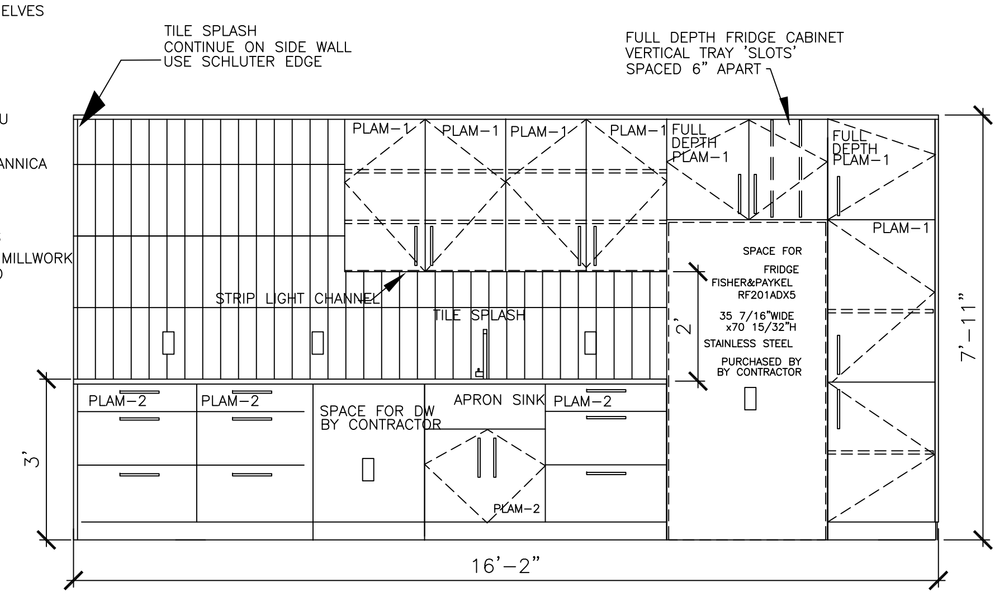

D4 PLAN & ELEV - STAFF ROOM 208
SCALE: 1/2"=1'-0"

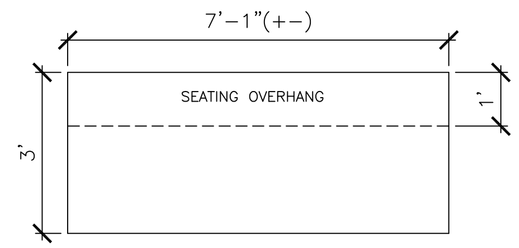

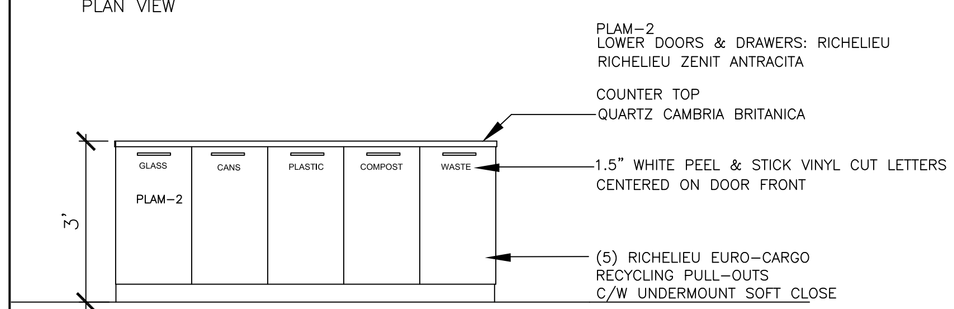

D5 ELEV - ISLAND STAFF ROOM 208
SCALE: 1/2"=1'-0"

NOTE:

DO NOT SCALE DRAWINGS

CONTRACTOR AND ALL SUB-CONTRACTORS SHALL VERIFY ALL JOB SITE DIMENSIONS, ALL DRAWINGS, DETAILS AND SPECIFICATIONS AND REPORT ANY DISCREPANCIES TO THE INTERIOR DESIGNERS PRIOR TO PROCEEDING WITH THE WORK.

THIS DRAWING AND ALL ELECTRONIC MEDIA IS THE EXCLUSIVE PROPERTY OF GRAPHIC OFFICE INTERIORS LTD. AND CAN BE REPRODUCED ONLY WITH THE PERMISSION OF GRAPHIC OFFICE INTERIORS LTD. IN WHICH CASE THE REPRODUCTION MUST BEAR THEIR NAME AS INTERIOR DESIGNERS.

NO.	BY	DATE	DESCRIPTION
1	LH	10/5/18	ISSUED FOR REVIEW

REVISIONS

NORTH

CONSULTANTS

GRAPHiC
OFFICE INTERIORS
1751 SEAN HEIGHTS, SAANICHTON BC
T.250-544-3509 F.250.544-6663

PROJECT

ISLANDS TRUST
200-1627 FORT STREET
VICTORIA BC

SHEET TITLE

DETAILS

SCALE	DRAWN BY	CHECKED	SHEET NO.
AS NOTED	LH		ID5 OF 6
DATE: 10 MAY 2018	ACAD FILE NAME		
DATE ISSUED: 10 MAY 2018	PROJECT NO.		REVISION NO. 1

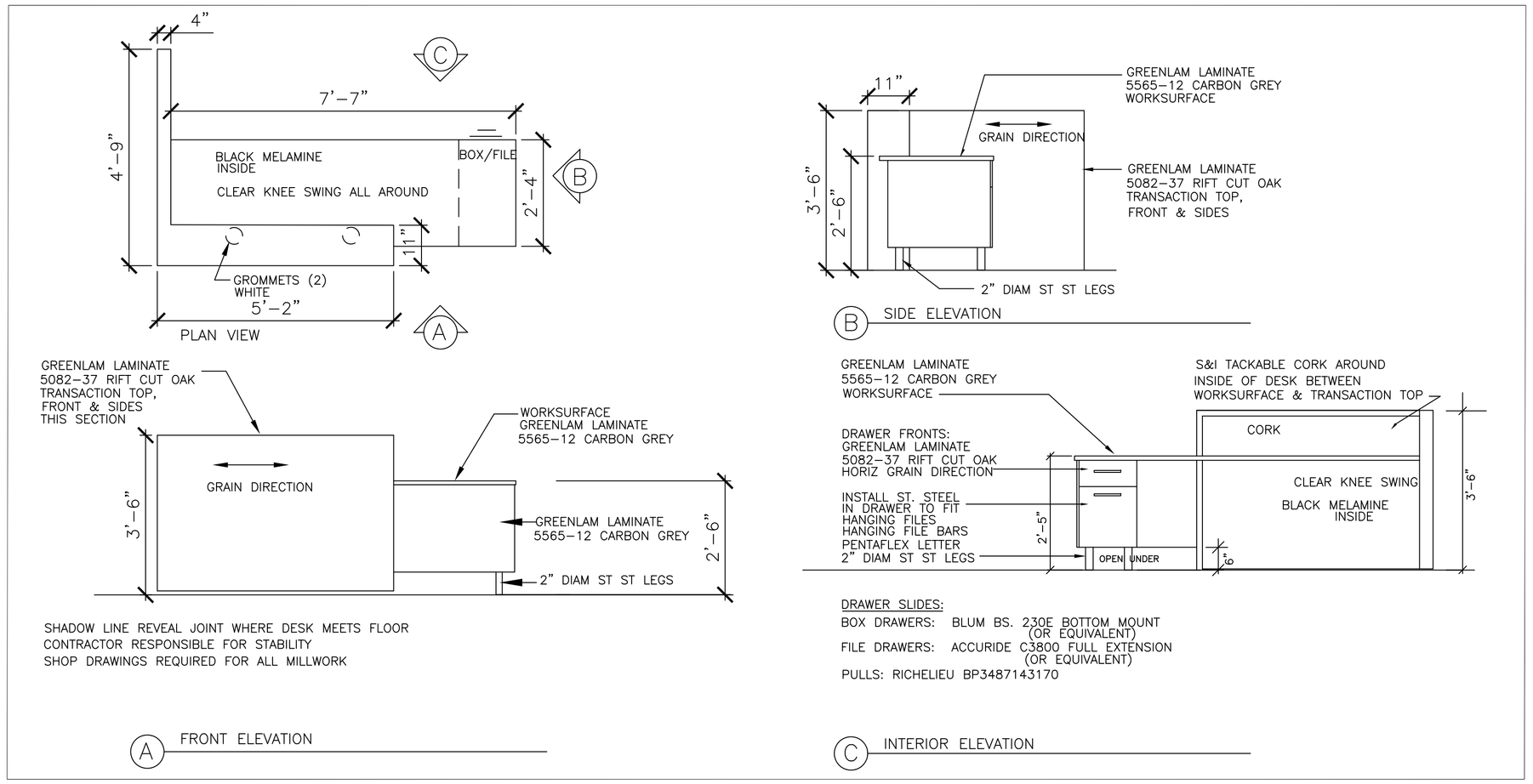

D1 PLAN & ELEVS – RECEPTION DESK
SCALE: 1/2"=1'-0"

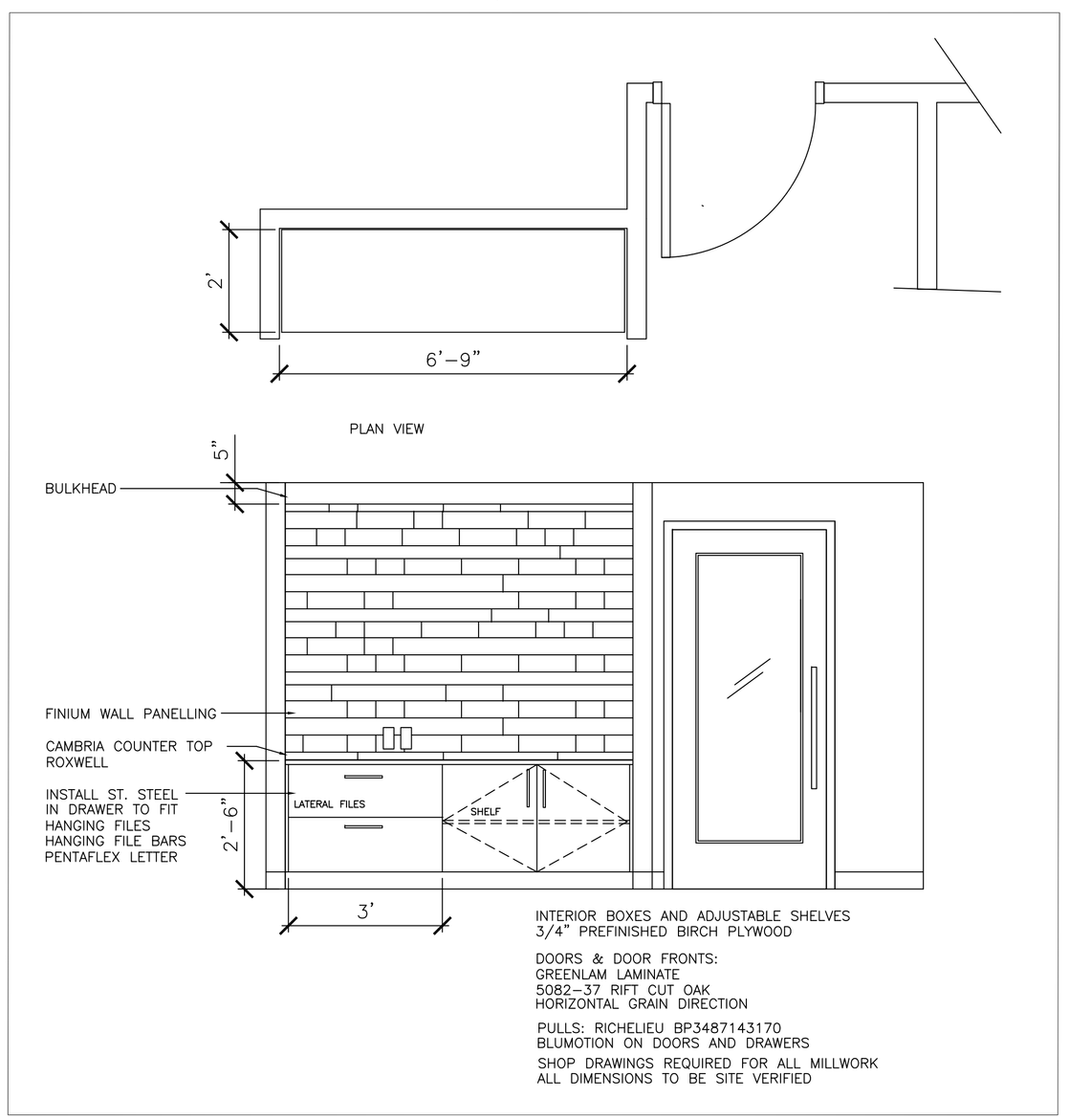

D2 PLAN & ELEV – RECEPTION CREDENZA
SCALE: 1/2"=1'-0"

NOTE:

DO NOT SCALE DRAWINGS

CONTRACTOR AND ALL SUB-CONTRACTORS SHALL VERIFY ALL JOB SITE DIMENSIONS, ALL DRAWINGS, DETAILS AND SPECIFICATIONS AND REPORT ANY DISCREPANCIES TO THE INTERIOR DESIGNERS PRIOR TO PROCEEDING WITH THE WORK.

THIS DRAWING AND ALL ELECTRONIC MEDIA IS THE EXCLUSIVE PROPERTY OF GRAPHIC OFFICE INTERIORS LTD. AND CAN BE REPRODUCED ONLY WITH THE PERMISSION OF GRAPHIC OFFICE INTERIORS LTD. IN WHICH CASE THE REPRODUCTION MUST BEAR THEIR NAME AS INTERIOR DESIGNERS.

NO.	BY	DATE	DESCRIPTION
1	LH	10/5/18	ISSUED FOR REVIEW

REVISIONS

NORTH

CONSULTANTS

GRAPHiC
OFFICE INTERIORS
1751 SEAN HEIGHTS, SAANICHTON BC
T.250-544-3509 F.250.544-6663

PROJECT

ISLANDS TRUST
200–1627 FORT STREET
VICTORIA BC

SHEET TITLE

DETAILS

SCALE	DRAWN BY	CHECKED	SHEET NO.
AS NOTED	LH		ID6 OF 6
DATE: 10 MAY 2018	ACAD FILE NAME		
DATE ISSUED: 10 MAY 2018	PROJECT NO.		REVISION NO. 1